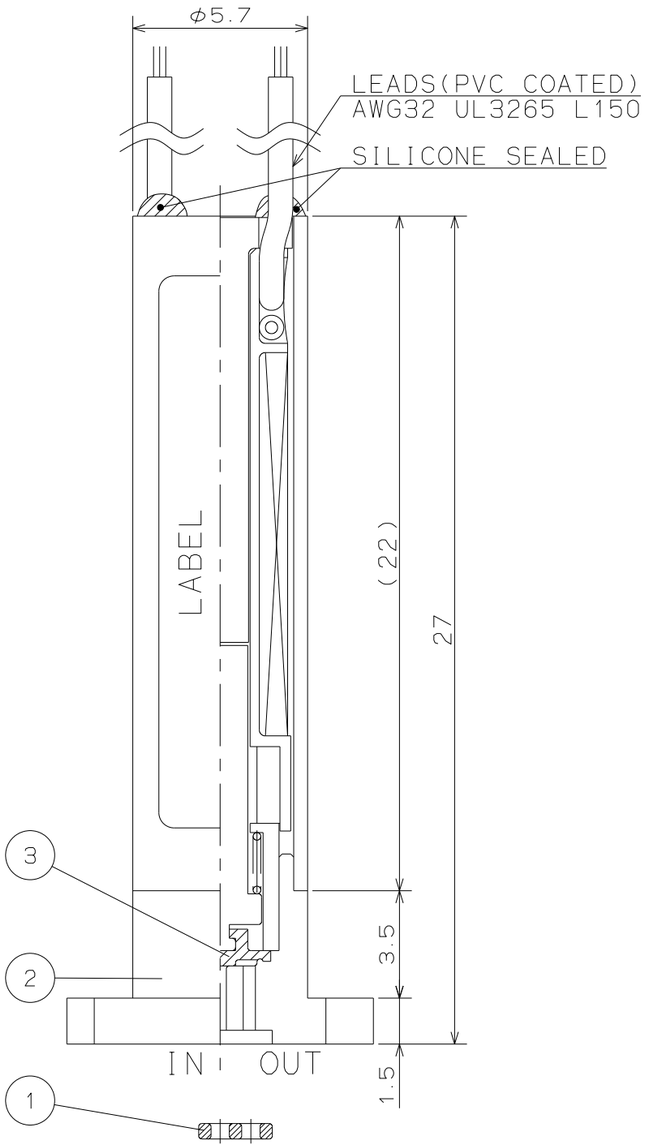

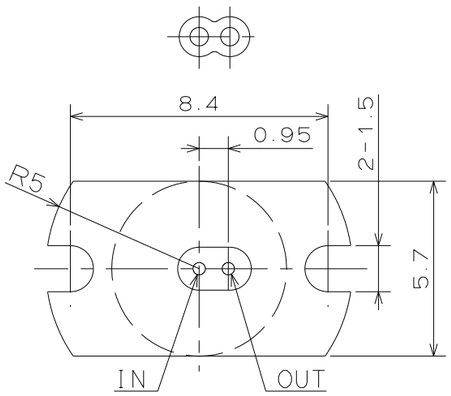

SOLENOID VALVE

FOR REFERENCE ONLY

SPECIFICATIONS for MODEL NLV-2-MFF(G)B

SOLENOID TYPE	:	LATCHING
ORIFICE DIAMETER	:	0.4mm
PORT CONNECTION	:	GASKET
OPERATING PRESSURE RANGE	:	IN 0 ~ 100kPa {0 ~ 1bar}
		OUT 0 ~ 50kPa {0 ~ 0.5bar}
FLUID MEDIA	:	FLUIDS CHEMICALLY COMPATIBLE WITH MATERIALS BELOW
MEDIA TEMPERATURE RANGE	:	10 ~ 50℃
AMBIENT TEMPERATURE RANGE	:	10 ~ 50℃
RATED VOLTAGE	:	5VDC、12VDC、24VDC
POWER CONSUMPTION	:	1.5W
ENERGIZING TIME	:	1s ~ 2s
DUTY CYCLE	:	ED=20%
INSULATION CLASS	:	CLASS B
DIELECTRIC STRENGTH	:	800VAC FOR 60s

TABLE OF LEAD COLOR, POLARITY AND VALVE STATUS

5VDC	POLARITY : LEAD COLOR	⊕ : RED ⊖ : WHITE	⊕ : WHITE ⊖ : RED
	STATUS	CLOSED → OPEN	OPEN → CLOSED
12VDC	POLARITY : LEAD COLOR	⊕ : BLUE ⊖ : WHITE	⊕ : WHITE ⊖ : BLUE
	STATUS	CLOSED → OPEN	OPEN → CLOSED
24VDC	POLARITY : LEAD COLOR	⊕ : BLACK ⊖ : WHITE	⊕ : WHITE ⊖ : BLACK
	STATUS	CLOSED → OPEN	OPEN → CLOSED

NOTE

MODEL NUMBER	DIAPHRAGM GASKET MATERIAL
NLV-2-MFFB	FPM
NLV-2-MFGB	DAIEL™PERFLUOR

WETTED MATERIALS

SYM.	DATE	DESCRIPTION	PART NO	PART NAME	MATERIAL	REQD.	NOTE
△							
△			3	DIAPHRAGM	FPM/DAIEL™PERFLUOR	1	
△1	'13-10- 1	INSIDE SHAPE CHANGE Y.H	2	VALVE BODY	PPS/PEEK	1	
			1	GASKET	FPM/DAIEL™PERFLUOR	1	

REVISION

SCALE	APPROVED	CHECKED	DRAWN		DRAWING NO
5/1 A3		A. Tada	R. Kato	SOLENOID VALVE NLV-2-MFF(G)B	13241-00-E

TAKASAGO ELECTRIC, INC. MIDORIKU, NAGOYA, JAPAN

2013- 8-22